HEAT&GLO

No one builds a better fire

MODERN COLLECTION

The beauty of form & the brilliance of function

It's no longer a question of one or the other. Our Modern Collection delivers both: the striking simplicity of contemporary design & the effortless convenience of gas technology. It's a powerful combination—one that can take any room from now to wow, instantly.

Style & substance. Current & classic. Form & function. That's Heat & Glo.

No one builds a better fire.

Paloma

Up-to-the-minute & state-of-the-art. The beauty of modern design meets the intelligence of advanced engineering. Paloma combines sleek lines and European styling with innovative thinking and finely detailed construction.

Shown above with green curved outer glass and matching optional parabolic-shaped hearth pad.

Shown right with cast stone surround, bronze curved outer glass and matching optional rectangular-shaped hearth pad.

Cyclone

The art & science of fire. The world's only flame art fireplace has taken the industry by storm. Out of the fireplace and into the spotlight, wall mounted or fully customized, Cyclone puts a whole new spin on fire.

Shown at left: Cyclone System with brushed copper decorative front and custom Bisazza tile finishing.

Shown in inset: Cyclone Custom in bar application.

Soulstice Fireplace with Halo Surround

Intimately sized & luxuriously crafted. A complete menu of premium features beautifully wrapped in a petite package. Designed for elevated viewing, Soulstice can be enjoyed from the comfort of your couch or the bliss of your bed.

Soho Fireplace with Studio Front

Our ideas & your dreams. Now what you can do with a fireplace is restricted only by your imagination. The versatile square shape and small size of Soho unlock all-new, creative installation opportunities.

Shown with custom wall finishing.

Everest Fireplace with Atlas Surround

Tall, bold & handsome. European-inspired design that's tall and slim, both classic and contemporary. The strength of concrete and fluidity of beveled glass merged with a unique, vertical shape.

SlimLine 750 Fireplace with Luna Surround

A look to the future & a nod to the past. Where modern merges with mainstream—the familiar face of a traditional fireplace warms the cool, clean lines of concrete.

SlimLine 550 Fireplace with Echo Surround

Ahead of the curve & over the top. The simplicity of a concave line plus the drama of bold concrete effortlessly elevate the fireplace to high design.

Paloma Specifications

MODEL	HEIGHT	FRONT WIDTH	BACK WIDTH	DEPTH	Viewing Area	BTU INPUT
Paloma with no surround	40-3/4	18-7/8	18-7/8	15-7/8	18-1/2 x 34-1/2	22,500-30,000 Btu/Hour (NG)
Paloma with surround	44-1/4	24-3/4	24-3/4	16-7/8	18-1/2 x 34-1/2	22,500-30,000 Btu/Hour (NG)

Paloma with Hearth Pad

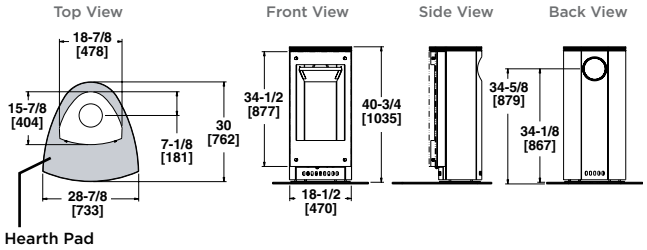

Paloma in Cast Stone Surround with Hearth Pad
(rear vent only, requires conversion kit)

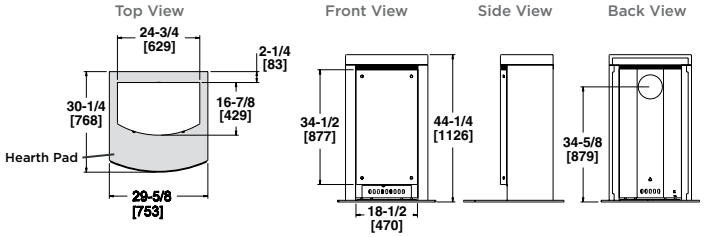

Dimensions above are in inches and for reference only. We recommend measuring individual units at installation. Make sure you do NOT cover the decorative door opening.

Refer to installation manual for detailed specifications on installing this product. Heat & Glo reserves the right to update units periodically. The flame and ember appearance may vary based on the type of fuel burned and the venting configuration used. Pictures in this brochure are not true representation of the fireplace, flames and/or finishes.

Cyclone Specifications

MODEL	HEIGHT		FRONT WIDTH		BACK WIDTH		DEPTH		GLASS SIZE	Btu/Hour Input
	Actual	Framing	Actual	Framing	Actual	Framing	Actual	Framing		
Cyclone System	49-1/2	50	28-1/4	28-5/8	11-7/8	28-5/8	15-7/8	16-3/8	7-7/8 x 34-1/2 x .20	13,500 Btu/Hour Input
Cyclone Custom	41-3/8	41-3/8	17	17-1/2	17	17-1/2	17	17-1/2	7-7/8 x 34-1/2 x .20	13,500 Btu/Hour Input

Cyclone System

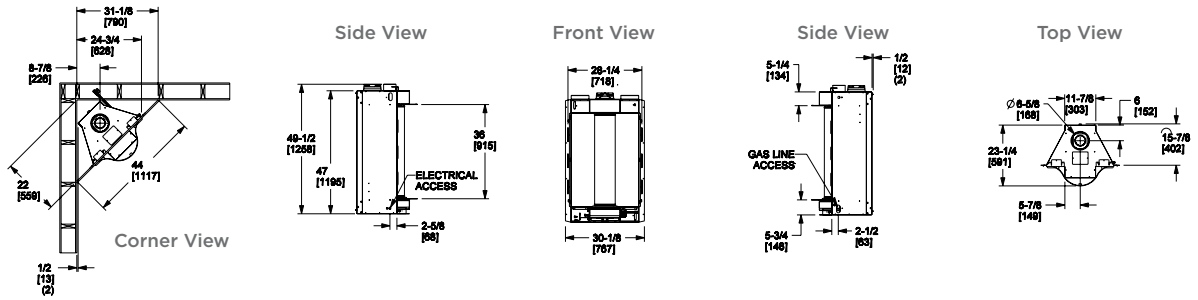

Cyclone Custom

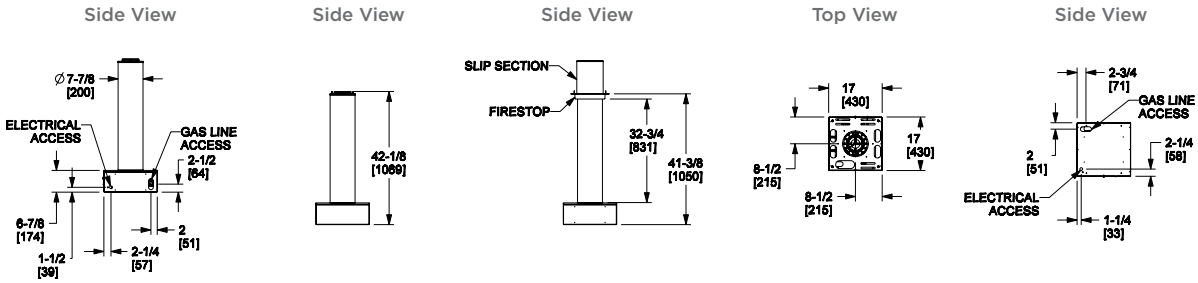

Dimensions above are in inches. Reference dimensions only. We recommend measuring individual units at installation. Assumes the use of 1/2" Sheetrock. NOTE: Non-combustible material is allowed over this dimension. Make sure you do NOT cover the decorative door opening.

Refer to installation manual for detailed specifications on installing this product. Heat & Glo reserves the right to update units periodically. The flame and ember appearance may vary based on the type of fuel burned and the venting configuration used. Pictures in this brochure are not a true representation of the fireplace, flames and/or finishes.

Soho Specifications

MODEL	HEIGHT		FRONT WIDTH		BACK WIDTH		DEPTH		GLASS SIZE	BTU/Hour Input (NG)
	Actual	Framing	Actual	Framing	Actual	Framing	Actual	Framing		
Soho24	37-3/16	44-3/16	29-1/8	29-5/8	23-1/16	29-5/8	11	11-1/2	17-1/2 x 19-3/8	14,000
Glass Studio Front	32-5/8		32-1/2				3-1/2			

Top View

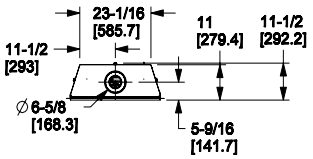

Side View

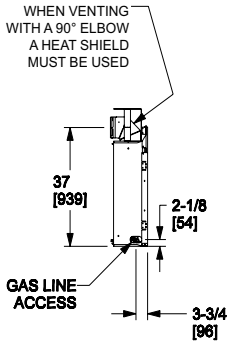

Front View

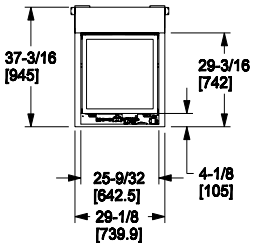

Side View

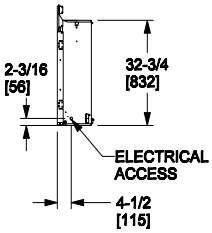

Top View Corner Installation

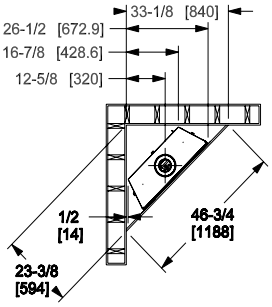

SPECIAL FRAMING REQUIRED FOR VERTICAL VENTING, SEE INSTALLATION MANUAL.

WHEN VENTING TO THE REAR WITH A 90° ELBOW INTO A 2 X 4 EXTERIOR WALL, THE SLK01TRD TERMINATION KIT IS REQUIRED.

SEE INSTALLATION MANUAL FOR FRAMING REQUIREMENT.

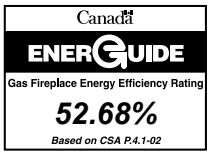

Glass Studio Front

Top View

Front View

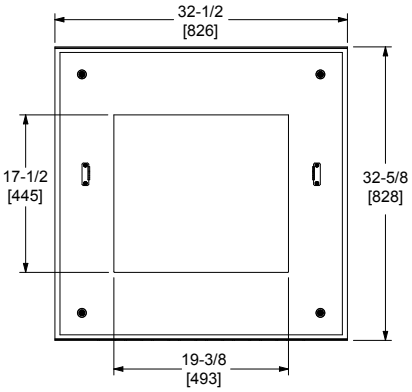

Side View

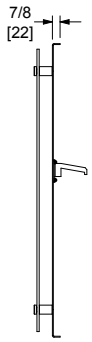

Dimensions above are in inches. Reference dimensions only. We recommend measuring individual units at installation. Assumes the use of 1/2" Sheetrock. NOTE: Non-combustible material is allowed over this dimension. Make sure you do NOT cover the decorative door opening.

Refer to installation manual for detailed specifications on installing this product. Heat & Glo reserves the right to update units periodically. Actual product appearance, including flame, may differ from product images.

Halo Dimensions

MODEL	HEIGHT	FRONT WIDTH	DEPTH
Halo Surround	32-5/8	37	4

Atlas Dimensions

MODEL	HEIGHT	FRONT WIDTH	DEPTH
Atlas Surround	68	52-1/4	6

Echo Dimensions

MODEL	HEIGHT	FRONT WIDTH	DEPTH
Echo Surround	41-5/8	52-1/2	3-3/4

Luna Dimensions

MODEL	HEIGHT	FRONT WIDTH	DEPTH
Luna Surround	40	57-1/4	7

Dimensions above are in inches and for reference only. We recommend measuring individual units at installation. Make sure you do NOT cover the decorative door opening.

Refer to installation manual for detailed specifications on installing this product. Heat & Glo reserves the right to update units periodically. The flame and ember appearance may vary based on the type of fuel burned and the venting configuration used. Pictures in this brochure are not true representation of the fireplace, flames and/or finishes.

Limited Lifetime Warranty

The strongest in the industry, Heat & Glo provides a limited lifetime warranty on gas-burning products for their most important aspects: firebox and heat exchanger.

** For full warranty details go to www.heatnglo.com.

IntelliFire™

Our exclusive, state-of-the-art IntelliFire ignition system reduces gas consumption and thermogenerator wear by providing a pilot flame only when needed. It also supplies a backup battery system to run the fireplace during a power outage.

Healthy Hearth

Our direct vent fireplaces feature a sealed combustion chamber that draws in fresh air from outdoors and discards all combustion by-products back outside. Recognized by the American Lung Association® Health House® program as a Clean Air Choice™.

c UL US LISTED

HEAT & GLO™

No one builds a better fire

7571 215TH STREET WEST, LAKEVILLE, MN 55044
(888) 427-3973 (952) 985-6000
HEATNGLO.COM/MODERN

A BRAND OF HEARTH & HOME TECHNOLOGIES, INC.

Actual product appearance, including flame, may differ from images.

HNG-1032U-0409